Sinks & Basins

Round Wall Mounted Drinking Fountain with Bubbler Landing

HBR-DF

- 1.2mm 304 grade stainless steel
- 215mm shroud
- 75mm splashback
- 40mm outlet– Suits PW40 & SSBW-40
- Concealed plumbing
- Suits P trap installation
- Integrated wall bracket
- Push button or lever bubbler options available

Top

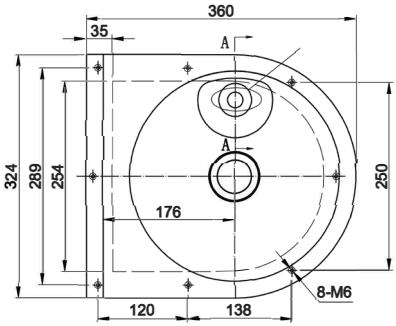

Back

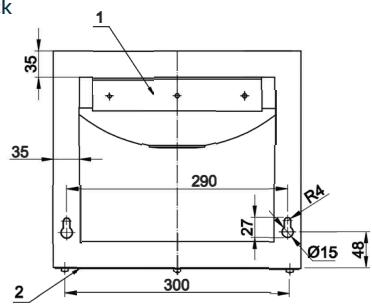
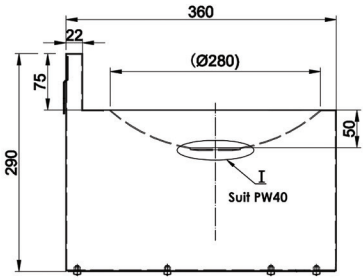
Side